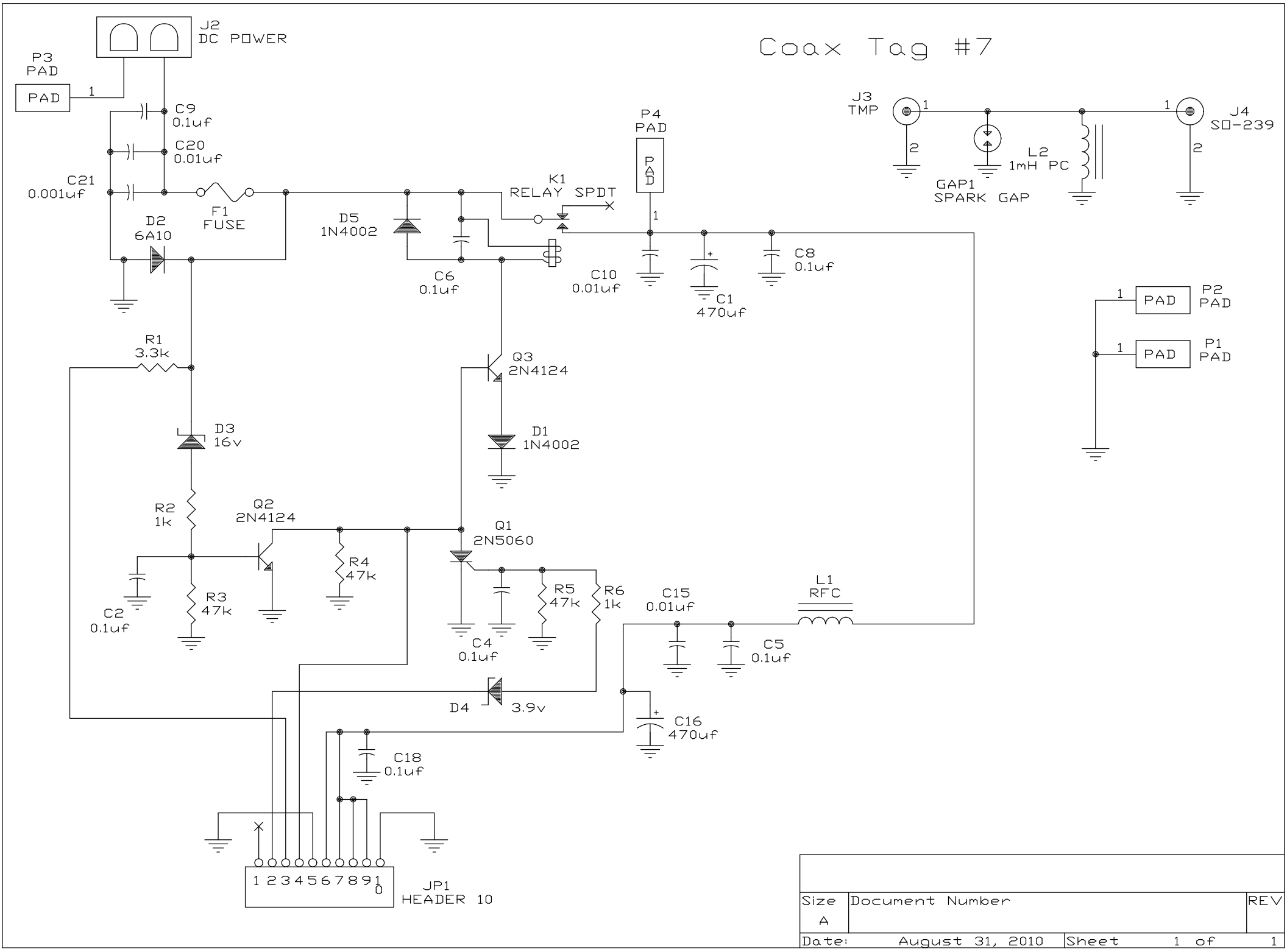
Coax Tag #7
J2
DC POWER
P3
PAD
PAD
1
C9
0.1uf
C20
0.01uf
C21
0.001uf
F1
FUSE
D2
6A10
D5
1N4002
C6
0.1uf
K1
RELAY SPDT
P4
PAD
PAD
1
C10
0.01uf
C1
470uf
C8
0.1uf
J3
TMP
1
2
GAP1
SPARK GAP
L2
1mH PC
1
2
J4
SO-239
1
PAD
P2
PAD
1
PAD
P1
PAD
R1
3.3k
Q3
2N4124
D1
1N4002
D3
16v
R2
1k
Q2
2N4124
Q1
2N5060
R4
47k
R3
47k
C2
0.1uf
R5
47k
R6
1k
C4
0.1uf
C15
0.01uf
L1
RFC
C5
0.1uf
D4
3.9v
C16
470uf
C18
0.1uf
1 2 3 4 5 6 7 8 9 1 0
JP1
HEADER 10
Size
A
Document Number
REV
Date: August 31, 2010
Sheet 1 of 1